KHU631-15

15 Inch Undermount Single Bowl
Stainless Steel Kitchen Sink

Kräus

SPECIFICATION SHEET

Sink Dimensions
Overall Dimensions: 14 1/2" x 12"
Bowl Dimensions: 12 1/2" x 10"
Bowl Depth: 7 5/8"

Features
- 18 Gauge Stainless Steel Construction
- Undermount Installation
- Single Bowl Sink
- Required Minimum Cabinet Size: 18" Left to Right, 15" Front to Back
- Center Set Drain
- 3 1/2" Drain Opening
- NoiseDefend Undercoating and Sound Dampening Pads

Accessories Included
- Strainer ST-1
- Bottom Grid KBG-631-15

CODES/STANDARDS:
Product Certification
cUPC (ASME A112.19.3/CSA B45.4)



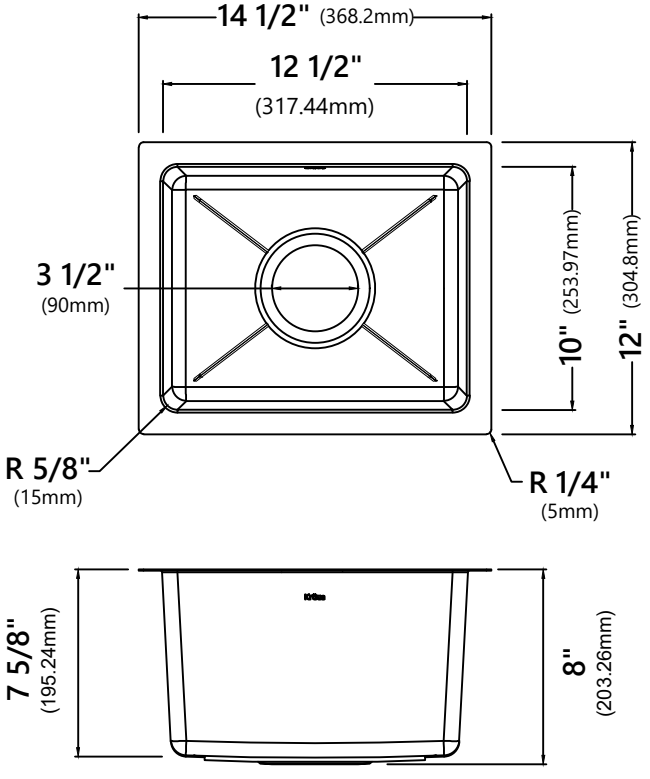

Warranty
Kraus Limited Lifetime Warranty
see website for details **www.kraususa.com**

Kraus USA Plumbing LLC Customer Service
1.800.775.0703 | customerservice@kraususa.com

REV. March 4, 2024