# KHU632-33

33 Inch Undermount Double Bowl
Stainless Steel Kitchen Sink

Kräus

SPECIFICATION SHEET

**Sink Dimensions**
Overall Dimensions: 32 1/2" x 19"
Each Bowl Dimensions: 14 3/4" x 17"
Bowl Depth: 8 3/8"

**Features**
- 18 Gauge Stainless Steel Construction
- Undermount Installation
- Double Bowl Sink
- Required Minimum Cabinet Size: 36" Left to Right, 24" Front to Back
- Center Set Drains
- 3 1/2" Drain Openings
- NoiseDefend Undercoating and Sound Dampening Pads

**Accessories Included**
- Strainer ST-1 x 2
- Bottom Grid KBG-632-33 x 2

**CODES/STANDARDS:**
**Product Certification**
cUPC (ASME A112.19.3/CSA B45.4)



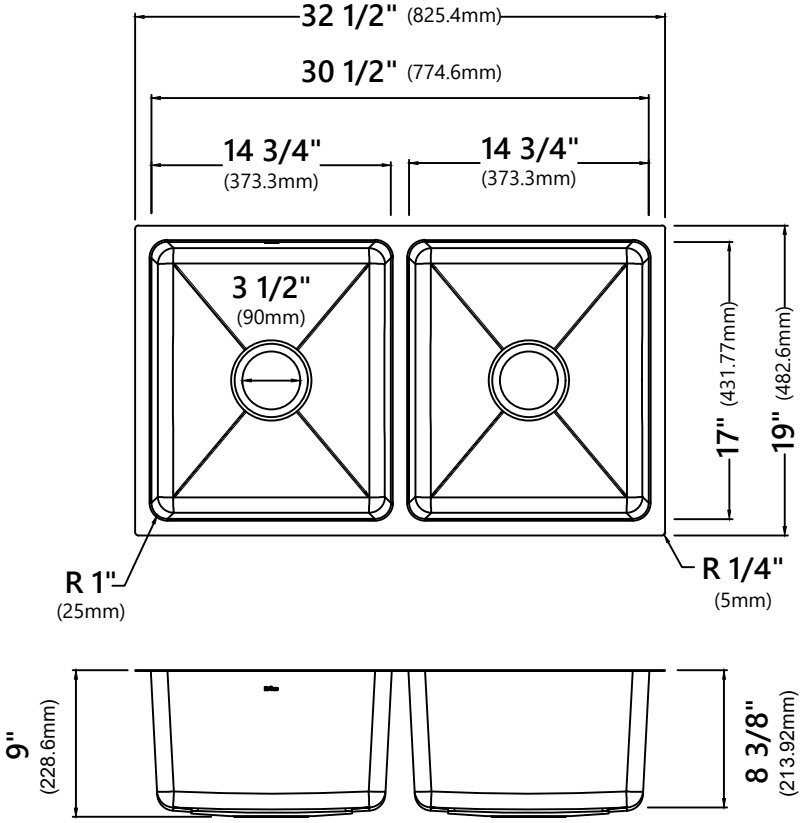


**Warranty**
Kraus Limited Lifetime Warranty
see website for details **www.kraususa.com**

**Kraus USA Plumbing LLC Customer Service**
1.800.775.0703 | customerservice@kraususa.com

REV. March 26, 2024